Hank

TRIGON

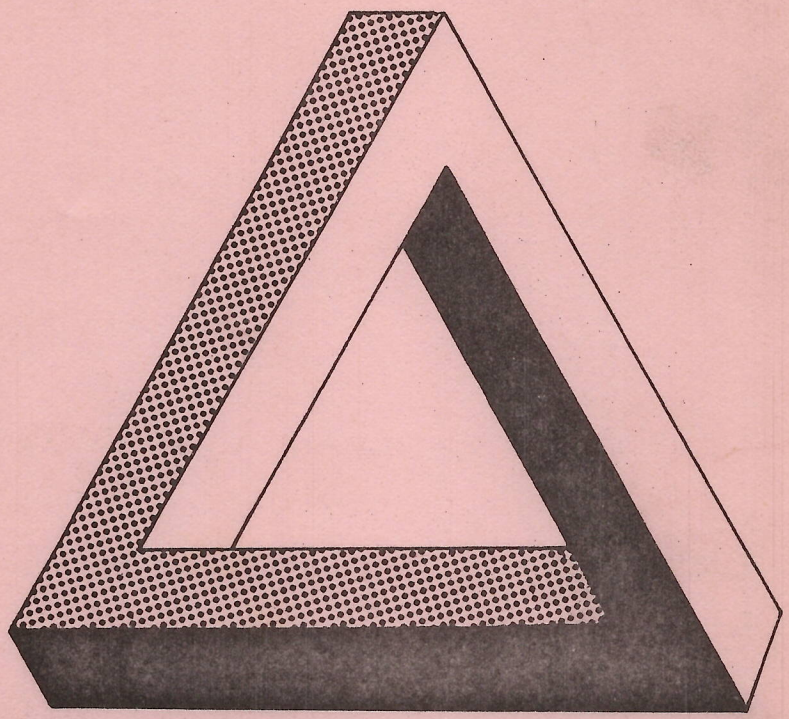

SCHOOL MATHEMATICS JOURNAL
OF
THE MATHEMATICAL ASSOCIATION OF
SOUTH AUSTRALIA

VOLUME 15 NO.2 AUGUST, 1977

TRICON

SCHOOL MATHEMATICS JOURNAL

OF

THE MATHEMATICAL ASSOCIATION OF SOUTH AUSTRALIA

VOLUME 15 NO.2 AUGUST, 1977

EDITORIAL COMMITTEE

J. van der Hoek P.R. Scott

M. Sved L. Bailey

SUBSCRIPTIONS

The Subscription for the three issues of TRIGON for 1977 will be $1.00. Subscriptions should be sent to

Mrs. M. Wardrop,
Wattle Park Teachers' Centre,
424, Kensington Road,
Wattle Park, 5066.

Notice that although we do not charge extra for single subscriptions, it does help us to keep our postage costs down when more than one issue is sent to the one address.

A number of back issues are still available:
School Mathematics Journal (up to 1974) - 15 cents per copy.
TRIGON - 20 cents per copy.

READERS' CONTRIBUTIONS

The editorial committee is always delighted to hear from the readers. Letters, short articles, mathematical snippets and cartoons should be sent to

The Editor, TRIGON,
Department of Pure Mathematics,
University of Adelaide,
Adelaide, 5001.

All material which is suitable for publication will be acknowledged in the Journal.

PRIZES

Book prizes will be awarded to students who submit the most correct solutions in each section to problems set in this Magazine.

BI-CENTENARY ESSAY COMPETITION

April 30, 1977 marked the two-hundredth anniversary of the birthday of CARL FRIEDRICH GAUSS. Gauss was one of the greatest mathematicians of all time and to commemorate this occasion, TRIGON is holding an essay competition. This essay competition is open to all students. Your essay, which should deal with some aspects of the life and work of Gauss should be approximately 2000 words. Book prizes will be awarded to the best original essay from each year, and the best essay will be published in TRIGON.

You should send your essay together with your year and the name of your school to the Editor of TRIGON, Dept. of Pure Mathematics, University of Adelaide, North Terrace, Adelaide, by October 1st, 1977. (This is an extension from 12th August as announced earlier.)

GENERATING FUNCTIONS

by M. Sved.

Part 2.

In part 1 of this article we dealt with a problem which led to a polynomial generating function. In this part we shall explore problems which give rise to infinite power series of the form

$$G(x) = u_0 + u_1x + u_2x^2 + u_3x^3 + \ldots + u_nx^n + \ldots$$

It can be proved rigorously that if x is within a domain of convergence (i.e., for $|x|$ small enough) then the rules of calculation with such infinite series, called power series, are just the same as with ordinary polynomials. More precisely, if

$$G(x) = u_0 + u_1x + u_2x^2 + \ldots + u_nx^n + \ldots$$

$$H(x) = v_0 + v_1x + v_2x^2 + \ldots + v_nx^n + \ldots$$

then we may add, subtract and multiply these series by the rules

$$G(x) \pm H(x) = (u_0 \pm v_0) + (u_1 \pm v_1)x + \ldots + (u_n \pm v_n)x^n + \ldots \qquad \ldots(A)$$

and

$$G(x)H(x) = w_0 + w_1x + w_2x^2 + \ldots + w_nx^n + \ldots \qquad \ldots(M)$$

where

$$w_n = u_0v_n + u_1v_{n-1} + \ldots + u_{n-1}v_1 + u_nv_0 \quad .$$

We are now ready to use generating functions for tackling a large class of problems. We will in particular discuss two important types.

§1.

For an example of the first type, we return to Euclid Park. This time we consider the parents' association of Euclid Park High School. This association has been working successfully for a number of years. The executive of the association each year consists of a president and a vice-president. Each year a new vice-president is elected, last year's president retires, and last year's vice-president becomes president. This means that each executive is in office for two years (with the exception of the president in the first year of the association). The documents of the association are all carefully filed and kept by the two executives. The pile of documents, however, mounts alarmingly! The year Mr. Newman is elected as new vice-president, he comes up with the following startling announcement:

"For a number of years I observed that the new vice-president received a number of documents from each of the retiring president and the new president (who was vice-president last year). The number of documents handed over by the retiring president is 3 times as many as he received when first elected (i.e., two years before) and the number of documents handed over by the new president was twice as many as he had received the previous year. If these conditions are allowed to continue, soon we will need not only new filing cabinets, but also new buildings to house them!!"

Strangely, the observations of Mr. Newman proved to be accurate. However, if we wanted to check whether his alarm for the future was justified, we would have to know how to evaluate the number of documents given to the new vice-president at the beginning of the nth year of the association. Denote this number by d_n. According to Mr. Newman's statement,

$$d_n = 2d_{n-1} + 3d_{n-2} . \qquad \ldots(B)$$

and we assume that the condition expressed by (B) is allowed to continue indefinitely. We complete the information by giving the initial conditions that the first president, who was in office for 1 year only, held no document when elected and the vice-president of the first year received only 1 document in the beginning. This makes

$$d_0 = 0 \quad \text{and} \quad d_1 = 1 .$$

Now as (B) was true in the second year,

$$d_2 = 2d_1 + 3d_0 = 2 .$$

Like the problem we handled in part 1, we have a recursive relation and we can work out easily the values of d_n for the first few years, as Mr. Newman no doubt did.

$$\begin{aligned} d_3 &= 2d_2 + 3d_1 = 7 \\ d_4 &= 2d_3 + 3d_2 = 20 \\ d_5 &= 2d_4 + 3d_3 = 61 \end{aligned}$$

and so on. This however does not give us a general formula for d_n. Let the generating function of $\{d_n\}$ be

$$G(x) = d_0 + d_1x + d_2x^2 + \ldots + d_nx^n + \ldots$$

where $d_0 = 0$ and $d_1 = 1$. From (B) we have,

$$d_n - 2d_{n-1} - 3d_{n-2} = 0$$

and thinking of the multiplication rule (M) of series given above, we work out the product

$$P(x) = G(x)(1 - 2x - 3x^2) .$$

The second factor in this product may be also regarded as an infinite series where all the coefficients of x^n are zero when $n > 2$. Applying the rule, we obtain

$$P(x) = d_0 + x(d_1-2d_0) + x^2(d_2-2d_1-3d_0)$$

$$+ \ldots + x^n(d_n-2d_{n-1}-3d_{n-2}) + \ldots$$

Since $d_0 = 0$, $d_1 - 2d_0 = 1$, and $d_n - 2d_{n-1} - 3d_{n-2} = 0$ for $n > 1$ we have

$$G(x)(1 - 2x - 3x^2) = P(x) = x .$$

Hence

$$G(x) = \frac{x}{1-2x-3x^2}$$

is the generating function of the sequence $\{d_n\}$. The coefficients of $G(x)$ can now be evaluated conveniently if we write

$$G(x) = \frac{x}{(1-3x)(1+x)} = \frac{A}{1-3x} + \frac{B}{1+x} \qquad \ldots(*)$$

that is, we break $G(x)$ up into partial fractions. A and B can be evaluated in $(*)$ by multiplying both sides of $(*)$ by $(1-3x)(1+x)$ and comparing coefficients, that is

$$x \equiv A(1+x) + B(1-3x)$$

Hence $1 = A - 3B$ and $0 = A + B$, giving $A = \frac{1}{4}$, $B = -\frac{1}{4}$. Remembering the infinite geometric progression formula (†)

$$\frac{1}{1-3x} = 1+3x+(3x)^2+\ldots+(3x)^n+\ldots \quad (\text{when } -\tfrac{1}{3}<x<\tfrac{1}{3})$$

$$\frac{1}{1-x} = 1-x+x^2-x^3+\ldots(-1)^n x^n+\ldots \quad (\text{when } -1<x<1)$$

so for a certain range of x, namely for $-\frac{1}{3}<x<\frac{1}{3}$,

$$G(x) = \tfrac{1}{4}(1 + 3x + (3x)^2 + \ldots + (3x)^n + \ldots)$$
$$-\tfrac{1}{4}(1 - x + x^2 + \ldots + (-1)^n x^n + \ldots)$$

and by the addition formula (A) above, the coefficient of x^n in

$$G(x) = d_0 + d_1 x + d_2 x^2 + \ldots + d_n x^n + \ldots$$

is

$$d_n = \tfrac{1}{4}(3^n + (-1)^n)$$

Seeing that 3^{21} is a little more than 10,000,000,000 Mr. Newman's warning should be taken seriously.

The way we have solved this problem illustrates a general method leading to the solution of recurrence relations of the type

$$u_n = a_1 u_{n-1} + a_2 u_{n-2} + \ldots + a_r u_{n-r} .$$

We associate with this relation the <u>characteristic polynomial</u>

$$Q(x) = x^{r+1} - a_1 x^r - a_2 x^{r-1} - \ldots - a_r .$$

Suppose the roots of $Q(x)$, i.e. solutions of $Q(x) = 0$, are $\alpha_1, \alpha_2, \ldots, \alpha_r$ and that these are <u>distinct</u>, then by the procedure used in Mr. Newman's problem, where $r = 2$, we obtain

$$u_n = A_1\alpha_1^n + A_2\alpha_2^n + \ldots + A_r\alpha_r^n \qquad \ldots(L)$$

[(†) $1 + r + r^2 + r^3 + \ldots = \frac{1}{1-r}$ whenever $-1 < r < 1$]

where $A_1, A_2, \ldots, A_n$ are constants, their values depending on the values of $u_0, u_1, \ldots, u_{r-1}$. (L) is known as Lagrange's theorem. We observe that if the roots of $Q(x)$ are not all distinct, we can still apply the generating function and the partial fractions method, but the resulting formula becomes more complicated.

§2.

We now present an example to illustrate a second type of problem. We shall see that here we begin by finding the generating function and this will lead to the establishment of a recursive relation, a procedure reversed to the one described in §1.

We wish to find the number of ways in which 2 dollars can be changed into 5 cent, 10 cent and 20 cent coins.

Let u, v, w represent the number of the respective coins which together make up 2 dollars. We seek the number of solutions of the equation

$$5u + 10v + 20w = 200$$

where u, v, w must be non-negative integers. We simplify this equation to

$$u + 2v + 4w = 40$$

and generalize to

$$u + 2v + 4w = n \,. \qquad \ldots(D)$$

Denote the number of solutions of (D) by S_n. In our particular problem we will want the value of S_n when $n = 40$. The generating function for $\{S_n\}$ is

$$G(x) = S_0 + S_1 x + S_2 x^2 + \ldots + S_n x^n + \ldots$$

Consider the three geometric series:

$$P_1(x) = 1 + x + x^2 + \ldots + x^u + \ldots = \frac{1}{1-x}$$

$$P_2(x) = 1 + x^2 + x^4 + \ldots + x^{2v} + \ldots = \frac{1}{1-x^2}$$

$$P_3(x) = 1 + x^4 + x^8 + \ldots + x^{4w} + \ldots = \frac{1}{1-x^4}$$

where we have assumed (for convergence) that $-1 < x < 1$. We claim that

$$G(x) = P_1(x)P_2(x)P_3(x) \,.$$

Indeed, let us find out the condition for obtaining an x^n term in the product of the three series. Since the general terms in them are of the form x^u, x^{2v}, x^{4w} respectively, we obtain x^n, whenever $x^u . x^{2v} . x^{4w} = x^{u+2v+4w} = x^n$, i.e., for each solution of the equation (D), there is exactly one term; hence the number of terms, which is the coefficient of x^n in the product, is S_n. Hence the required generating function is

$$G(x) = \frac{1}{1-x} \cdot \frac{1}{1-x^2} \cdot \frac{1}{1-x^4}$$

$$= \frac{1}{1-x-x^2+x^3-x^4+x^5+x^6-x^7} \qquad \ldots(**)$$

We look for a convenient way of evaluating the coefficients S_n . From (**) we have

$$(1-x-x^2+x^3-x^4+x^5+x^6-x^7)(S_0+S_1x+S_2x^2+\ldots+S_nx^n+\ldots) = 1 .$$

This means that the coefficients of x^n must vanish except for the coefficient of x^0. Thus

	S_0	$= 1$
coefficient of x^1:	$S_1 - S_0$	$= 0$
coefficient of x^2:	$S_2 - S_1 - S_0$	$= 0$
---	---	
coefficient of x^n:	$S_n - S_{n-1} - S_{n-2} + S_{n-3} - S_{n-4} + S_{n-5} + S_{n-6} - S_{n-7}$	$= 0$

This last equation gives the desired recursion formula

$$S_n = S_{n-1} + S_{n-2} - S_{n-3} + S_{n-4} - S_{n-5} - S_{n-6} + S_{n-7}$$

for $n \geqslant 7$. The formula is also valid for all $n > 1$, if we agree to set S_k equal to zero when k is negative.

The following table shows the successive values of the coefficients.

n	+	-	S_n
0			1
1	1		1
2	1,1		2
3	2,1	1	2
4	2,2,1	1	4
5	4,2,1	2,1	4
6	4,4,2	2,1,1	6
7	6,4,2,1	4,2,1	6
8	6,6,4,1	4,2,2	9
9	9,6,4,2	6,4,2	9
10	9,9,6,2	6,4,4	12
11	12,9,6,4	9,6,4	12
12	12,12,9,4	9,6,6	16

We may continue in this manner until we find S_{40} , the desired result. Alternatively we can discover some regularities in the sequence of S_n values which we can verify by induction. Can you see one? We may let you into the secret that $S_{40} = 121$.

You may use the method above for finding the number of the non-negative solutions of Diophantine equations(†) of the type (D).

(†) Diophantine equations are equations which are to be solved for integer solutions, named after Diophantus [ca.250 B.C.].

As an exercise you could find the number of ways of changing your 2 dollar note into silver coins, (this would include the 50 cent coin which we ignored so far), or into just 1 cent and 2 cent coins. This may require considerably more arithmetic.

We welcome any suggestions for alternative methods for solving the problems discussed. The method of generating functions is a useful and elegant tool, but it does not hold the monopoly as a solving technique for combinatorial problems. We would like to publish any interesting remarks or suggestions coming from you. You could also think of novel problems for which generating function method is suitable.

References:

I. Anderson: A First Course in Combinatorial Mathematics (Chapters 1 and 4) (Clarendon Press, Oxford).

Marshall Hall: Combinatorial Theory (Chapter 3) (Blaisdell Publ. Company, Mass.).

N.Y. Vilenkin: Combinatorics (Chapter 8) (Academic Press, New York, London).

FROM AN OLD FRENCH BOOK

A half full bottle is the same as a half empty one.
In mathematical symbols:

$$\tfrac{1}{2}\text{F.B.} = \tfrac{1}{2}\text{E.B.} \qquad \ldots(*)$$

Multiply both sides of (*) by 2 to yield

$$\text{F.B.} = \text{E.B.}$$

or a full bottle is the same as an empty bottle!

[As a matter of interest how can you determine whether a bottle is half full without using any measuring device or pouring any of the contents from the bottle?]

A.N.U. - A.A.M.T. NATIONAL MATHEMATICS SUMMER SCHOOL

The National Summer School was held at the Australian National University from January 10th till 22nd this year. Each year this Summer School is open to students who are completing year 11. Students representing S.A. were selected by the Mathematics Association of South Australia. The representatives this year were: Andrew James (Prince Alfred College), Mark Lawrence (Westminster School), Brenda Masters (Cleve Area School), Melissa Robbie (Norwood High School), Hugh Seppelt (St. Peters College), Kevin White (Westminster School).

Here are some of the notes supplied by the S.A. representatives:

We were accommodated at Bruce Hall, a students' residential hall on the campus at the A.N.U. In all there were 61 high school students and four tutors in residence, plus various mathematicians and two administrative staff.

We were kept to a tight schedule of lectures and tutorials from the start. Professor Ross of Ohio State University, Dr. Jerry Gagen of Sydney University, and Dr. Mike Newman of A.N.U. were our main lecturers.

Professor Ross gave a course on Number Theory. As main lecturer, he was entitled to set daily worksheets, and this he did without fail. Consisting mostly of problems (not exercises), statements with instruction to 'prove or disprove and salvage if possible', and a few hints for research (to be carried out in the extensive A.N.U. library), each worksheet was designed to stimulate our intellect and improve our mathematical technique and ability. A two hour tutorial followed each of Professor Ross's lectures during which, with the help of tutors, we explored some of the fascinating facets of Number Theory.

Dr. Gagen lectured on the Principles of Mathematical Induction and showed how it can be easily misused to prove something is true when it is not. Dr. Newman lectured on Geometry, including some searching philosophy on the concepts of area and volume.

Although all students had just completed year 11, we found that there was a wide range in the level of experience reached by each. As a result of this, many of us were devoting every second of free time, as well as the allotted periods, to private study; the tutors were particularly helpful in this, making themselves available to us all hours of the day and most of the night.

Apart from the strictly mathematical side of things, we were encouraged to participate in some form of recreation (running, tennis, table-tennis, squash, cricket) and to take part in pre-arranged activities which, included an 'ice-breaking' session on the first night, a bus tour of Canberra, a Picnic Tea in the hills, a visit to Mt. Stromlo, and a look through the C.S.I.R.O.

* I feel that my mathematical horizons have been broadened considerably.
* This was a good opportunity to meet students from other states and to discuss varying curriculums.
* I found out a lot about mathematics I hadn't known before.
* None of us went home the same.
* Our learning has taken on a new dimension after this incredible fortnight of study.
* Many thanks to the organizers.

RESEARCH CORNER

Take a sheet of squared paper and take some vertex near the centre as the origin O . Starting from O, take a "step" of length 1 in any of the four directions up, down, left or right, so that this step ends at one of the four nearest lattice points. Now take another such step 'at random' and continue in this fashion for n steps. Such a sequence is called a random walk of n steps. The diagram shows a random walk of 12 steps. This walk is special because it never crosses itself; in fact it never touches the same lattice point twice. How many random walks of this type are there for each n? Of course it would be nice to have the answer as a function of n. Can you see that the answer will be something less than 4^n?

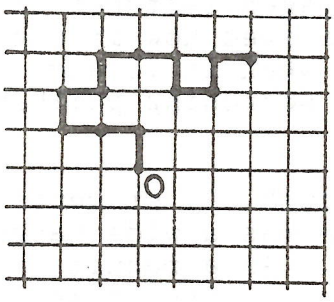

The Norwegian Pound

Niels Henrik Abel (1802 - 1829) was perhaps the greatest of Norway's mathematicians. Amongst other things, he proved that there is no "formula" giving the solutions of the general quintic equation

$$x^5 + ax^4 + bx^3 + cx^2 + dx + e = 0$$

[Recall that the general solution of $x^2 + bx + c = 0$ is given by

$$x = -\tfrac{1}{2}b \pm \tfrac{1}{2}\sqrt{b^2-4c} \quad .]$$

At university, Abel was taught by a certain Professor Hansteen, who owned a large house in Oslo. The professor's wife, Fru Hansteen, together with a group of prominent young ladies, often attended popular lectures on physics and other scientific topics - an unheard-of happening in the town. It has been told that Professor Hansteen was without a laboratory for a time, and used his wife's kitchen to compare various standard measures with the prototypes for his country, which he kept at home. Fru Hansteen was an earnest assistant, but once she happened to file away too much from the weight she was working on. In her eagerness to restore the balance she gave the prototype a couple of heavy strokes with a file. This may be true, at least it has been reported that later when the Norwegian pound was compared with the Danish standard, it was a couple of grams underweight!

Fru Hansteen may not have realized immediately what the implications of her "heavy strokes" would have entailed. However, there are stories of people filing some gold from gold nuggets on purpose. Consider the following story. In a particular town in fairyland there is a landlord who has 100 tenants. At the end of the year, each tenant is to pay the landlord his rent of 100 gold nuggets. Each gold nugget weighs exactly 10 grams. However, one of the tenants decides to cheat the landlord by filing $\frac{1}{10}$ gram from each of his 100 nuggets. The landlord hears of the plan, but does not know which of his tenants is the culprit. He has

at his disposal a very accurate coin operated weighing machine (which tells the weight when the coin is inserted). Can he find the wicked tenant with just one weighing?

[Answer on page 40.]

AN OPTICAL PROPERTY OF THE ELLIPSE

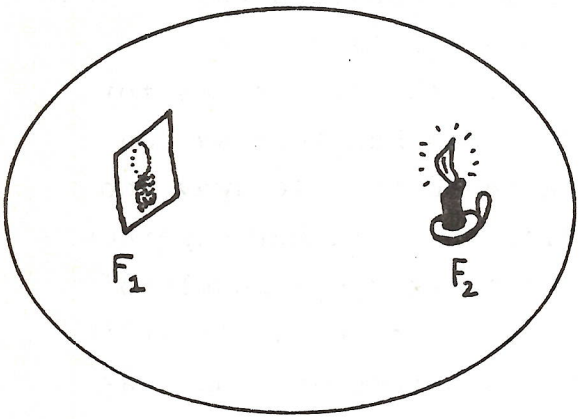

$\mathcal{C}$ represents a flat, elliptically shaped cylinder, the interior being highly polished to form a mirror surface. If a burning candle or a small incandescent globe is placed at one of the focal points, say F_1, then on a screen placed at F_2 a sharp image of the candle or globe will be formed. Alternatively, $\mathcal{C}$ could be regarded as an elliptically shaped billiard table. No matter which way a ball is hit from F_1, after reflection from the cushion, it will run through F_2.

A simple geometrical argument suffices to prove this striking property. Two things are needed for the proof which you will complete yourselves. One is the defining property of the ellipse:

(1) The ellipse is the locus of the points P, the sum of the distances of which from the focal points F_1 and F_2 is constant,

$$\text{i.e.,} \quad F_1P + PF_2 = 2a$$

where $2a$ is the length of the major axis.

The second thing is the well known minimality principle of reflection which we state here and draw a diagram which enables you to recall the proof.

(2) A and B are two points situated on the same side of a line ℓ. If P is a point on ℓ such that the sum of the distances AP + PB is as small as possible, then the angles at which the lines AP and PB are inclined to ℓ are equal.

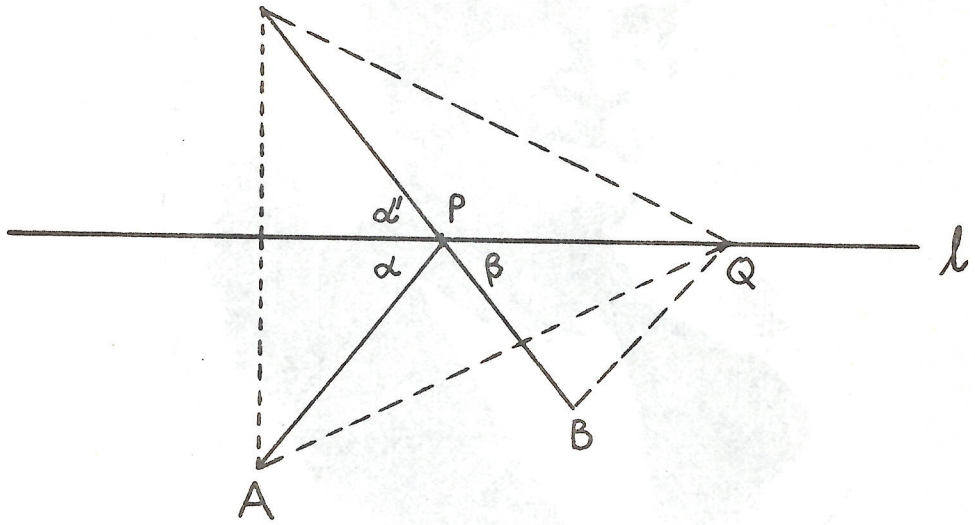

The optical property of the ellipse can be proved then by considering any point P on the ellipse, drawing a tangent line t at P and proving that the sum of the distances $F_1Q + QF_2$ is greater than $F_1P + PF_2$ if Q is any point on t, distinct from P. We leave the proof to you: see Senior problem number 050.

Sound waves originating at one of the focal points of the ellipse show the same behaviour as light waves. This was well known in the intrigue-filled times of the renaissance. Chapels of elliptical shape were built, with the confessional booth carefully built at one of the foci. The secrets of the confession could then be picked up by the listening enemy at the other focus.

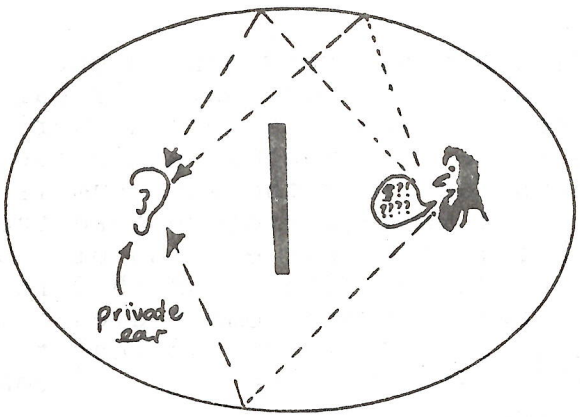

There lived once a fellow called Procus,
With a voice one could call somewhat raucous,

Though he tried not to shout,
His secrets were out,
For they travelled from focus to focus.

Charles Babbage, 1792–1871.

BABBAGE AND TENNYSON

Charles Babbage (1792 - 1871) is remembered for his work on calculating machines. He was always calling attention to errors in tables and calculations, and it is said that he sent the following letter to Lord Alfred Tennyson in connection with a couplet in the poet's "The Vision of Sin":

> "Every minute dies a man,/Every minute one is born": I need hardly point out to you that this calculation would tend to keep the sum total of the world's population in a state of perpetual equipoise, whereas it is a well-known fact that the said sum is constantly on the increase. I would therefore take the liberty of suggesting that in the next edition of your excellent poem the erroneous calculation to which I refer be corrected as follows: "Every moment dies a man/And one and a sixth is born." I may add that the exact figures are 1.167, but something must, of course, be conceded to the laws of metre.

It is a fact that up to 1850 the couplet in all editions reads, "Every minute dies a man,/Every minute one is born," while in all later editions it reads, "Every moment dies a man,/Every moment one is born."

FINDING THE MAXIMUM VALUE OF A FUNCTION WITHOUT USING CALCULUS

by Mr. R.F. Jones

Many practical functions in applied science cannot be written down as a simple formula and can only be sampled. Thus the function $f(x)$ is like a 'black box' where we can input any value of x we like and get out a corresponding value of $f(x)$ without much idea of how $f(x)$ is evaluated.

Suppose we have such a black box function $f(x)$ whose function values increase to a maximum and then decrease steadily between $x = 3$ and $x = 5$. Let this maximum value be attained at $x = x^*$. Thus the problem is to find in the most efficient manner a small interval of x in which x^* is guaranteed to lie, by sampling values of the function $f(x)$ at certain values of x between $x = 3$ and $x = 5$. That is, given the number of evaluations of $f(x)$ we are allowed to make, where should we make these evaluations so that the final interval in which x^* must lie is as small as possible?

In the data that follows $f(x) = x \exp(-\sqrt{x}/1.0127)$ where $\exp(y)$ means e^y and e is the exponential constant 2.718..... . Readers conversant with the calculus should be able to find the maximum value of $f(x)$. To start with we have:

x	3	5
f(x)	0.5424	0.5496

After each evaluation of $f(x)$, the new interval in which x^* must lie is called the <u>interval of uncertainty (IU)</u>.

Suppose we are allowed one evaluation only. You may think evaluating $f(x)$ at $x = 4$ will help you to decide whether x^* lies between 3 and 4 or between 4 and 5. This is not the case.

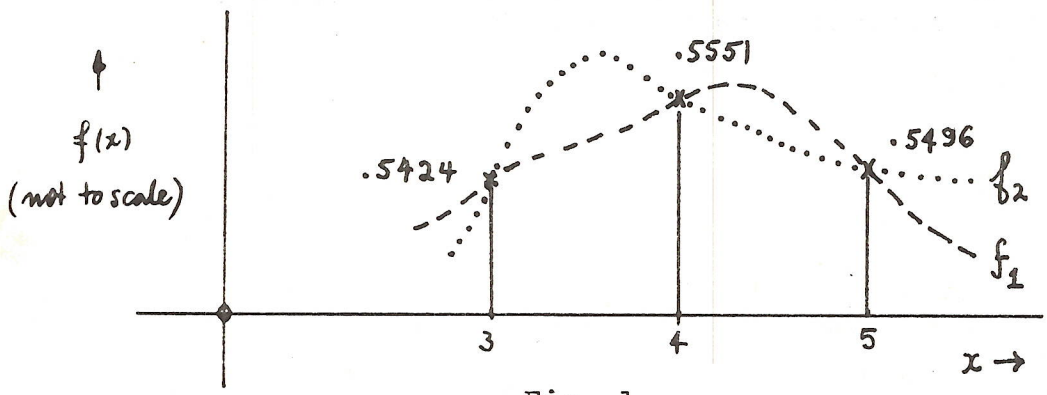

Fig. 1

In fig. 1 f_1 and f_2 could be possible sketch graphs of $f(x)$ using the values of $f(x)$ at $x = 3$, 4 and 5. Hence our evaluation at $x = 4$ will not help us to reduce IU.

QUESTION: If $f(3.5) = 0.5518$ convince yourself that knowing $f(x)$ at $x = 3$, 3.5 and 5 does not reduce IU.

Now if we use the evaluations at $x = 3$, 3.5, 4 and 5 we <u>can</u> reduce IU and this is where the assumption that there is a unique maximum value of $f(x)$ in the interval $x = 3$ to $x = 5$ has to be used.

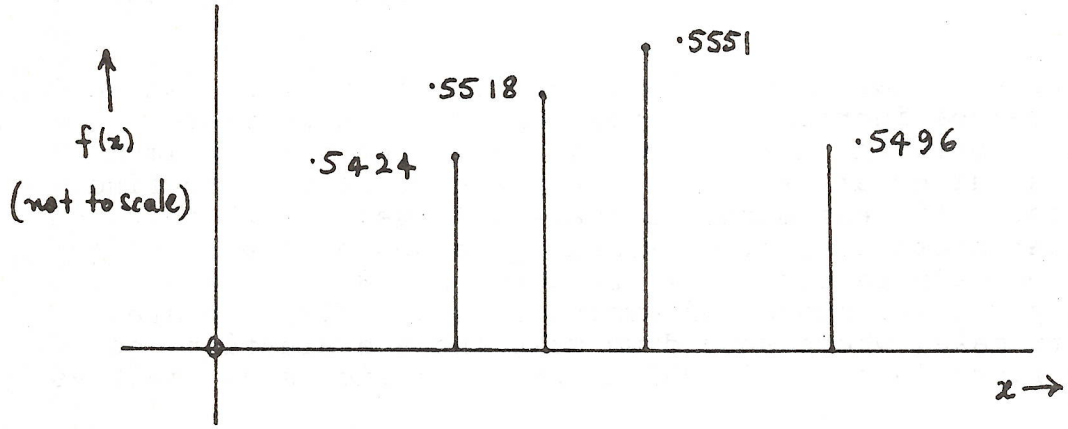

Fig. 2

As illustrated in fig. 2 since $f(4) > f(5)$ and $f(4) > f(3.5)$ then $3.5 < x^* < 5$. (For $x^* < 3.5$ would imply $f(x)$ has more than one maximum value in the interval $x = 3$ to $x = 5$.) We have thus been able to reduce IU to a length of 1.5 units with these two evaluations (at $x = 3.5$ and 4).

QUESTION: Could we have placed these two evaluations (i.e. at $x = 3.5$ and 4) in a better position to make IU smaller than 1.5?

Yes! They should be placed <u>symmetrically</u> with respect to the <u>centre</u> of the interval and as close together as possible without merging their positions. This is an important principle of the searching techniques to be described. How close together involves the concept of resolution and this we shall oversimplify in the following discussion. Suppose we will only consider evaluating $f(x)$ for values of x no closer than 0.01 units apart. This we will call the resolution factor ε, so $\varepsilon = 0.01$. We will therefore evaluate $f(x)$ at $x = 3.995$ and $x = 4.005$. Since $f(4.005) > f(3.995)$ $3.995 < x^* < 5$ and IU = 1.005, just over half the original interval (see fig. 3).

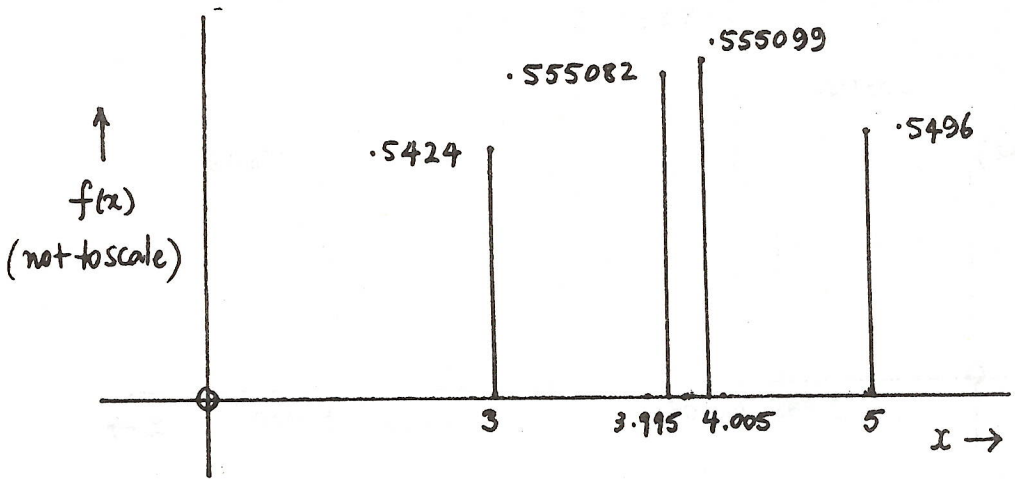

Fig. 3

We can now do one of two things to reduce IU.

(1) We repeat the whole process with <u>two</u> more evaluations placing them symmetrically with respect to the centre of the interval between $x = 3.995$ and $x = 5$ and as close together as possible. The reader should check that the placements would be at $x = 4.5425$ and $x = 4.5525$ where $f(4.5525) > f(4.5525)$ giving $3.995 < x^* < 4.5525$ (see fig. 4).

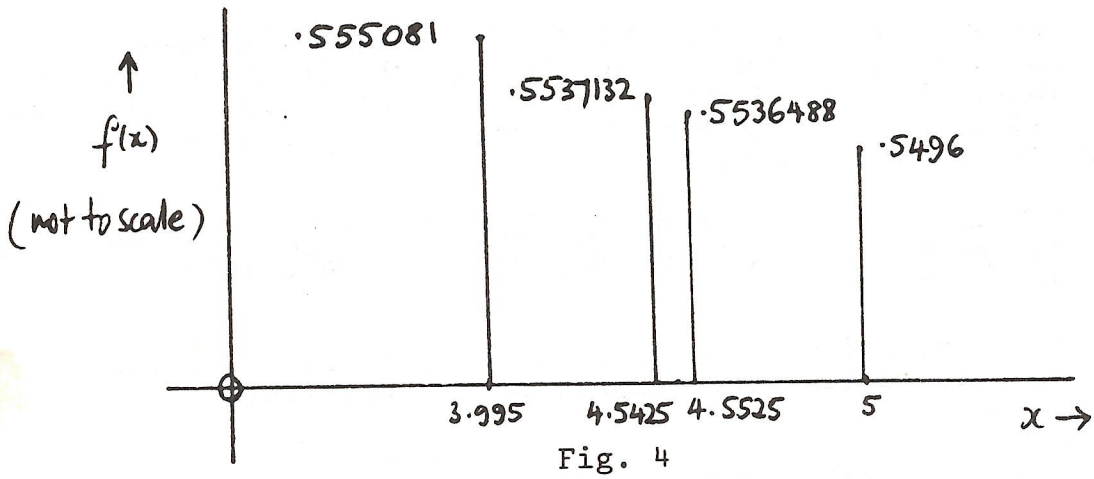

Fig. 4

(2) We can make <u>one</u> more evaluation and use the value of $f(x)$ at $x = 4.005$ by placing the new x symmetrically with respect to $x = 4.005$ about the centre of the new interval. This would be at $x = 4.990$ and since $f(4.005) > f(4.990)$, $3.995 < x^* < 4.990$ and there has been very little reduction in IU. (See fig. 5).

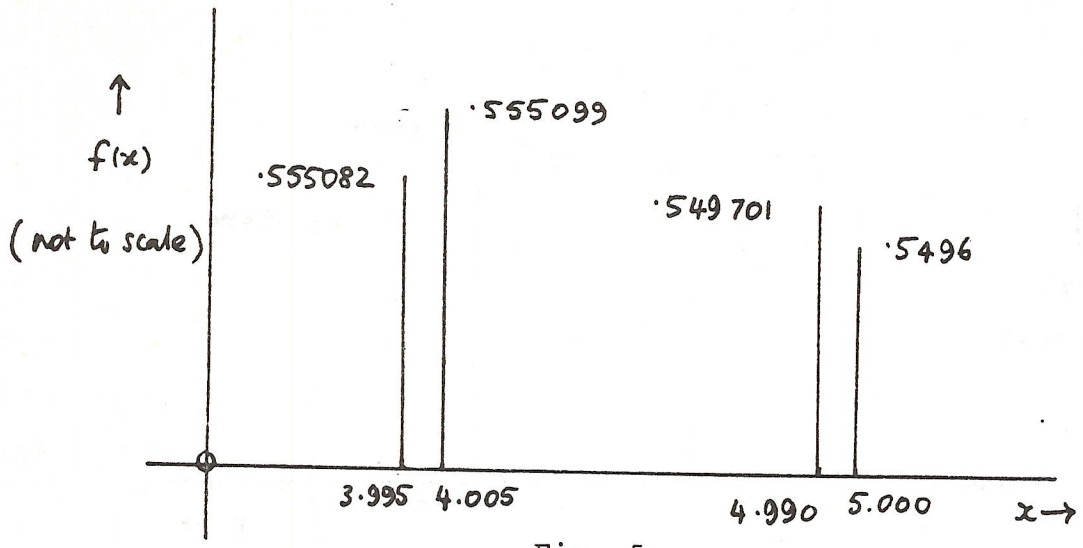

Fig. 5

The first method of continuation is called the <u>dichotomous search</u> (binary chop) and is inefficient because it does not make good use of previous placements - in our example the value at $x = 4.005$ has been ignored. The second method of continuation has used the value of $x = 4.005$ but has hardly reduced IU because we should have anticipated all three evaluations before deciding where to place the first two. If we intend doing more evaluations then the position of all of them must be considered before we can place the first two. This we will now do for the general situation not just for our example.

Let $x_1, x_2, \ldots\ldots, x_n$ be the n successive placements of x at which $f(x)$ is to be evaluated, L_1 the length of the original interval and L_k the length of IU after k evaluations. Thus L_n will be the length of the final IU after all n evaluations. We wish to find -

(i) a relationship between L_1 and L_n so that we can decide the size of n to give us a small enough value of L_n,

(ii) the successive relationships between $L_1, L_2, L_3, \ldots$ so that we can successively place $x_1, x_2, x_3, \ldots$.

First of all consider the final stage with the last evaluation point x_n to be put in. Point x_{n-1} is already in L_{n-1} and x_n will be placed symmetrically with

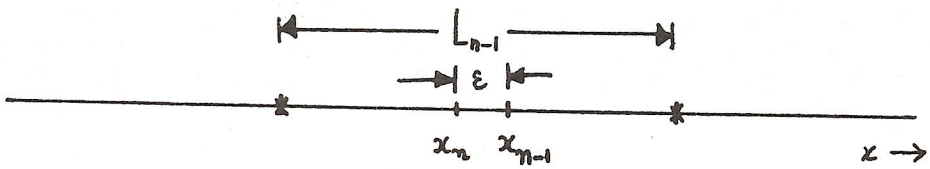

Fig. 6

respect to x_{n-1} about the centre of L_{n-1}. We wish to arrange this in such a way that at this last step x_n and x_{n-1} are, say, ε apart. The final interval L_n can be in one of two positions depending on the relative values of $f(x_n)$ and $f(x_{n-1})$.

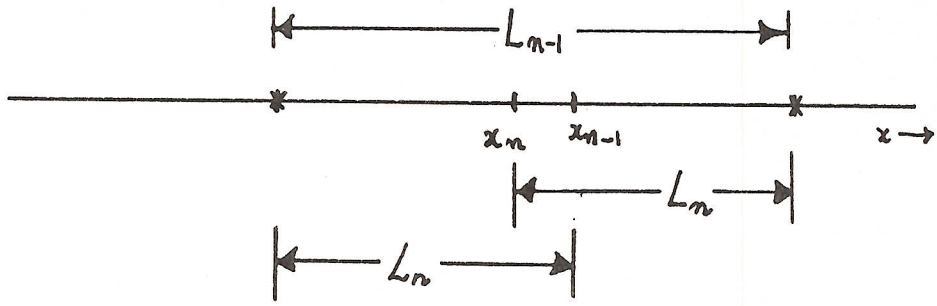

Fig. 7

From Figs. 6 and 7 we have

$$L_n = \tfrac{1}{2}L_{n-1} + \tfrac{1}{2}\varepsilon \quad - - - - - - - - - \quad A$$

or

$$L_{n-1} = 2\,L_n - \varepsilon$$

Now starting at the beginning with an interval L_1 between $x = \alpha$ and $x = \beta$ fig. 8 shows that

$$L_1 = L_2 + L_3$$

(where x_1, x_2 are placed symmetrical about centre of L_1 and x_2, x_3 are symmetrical about centre of L_2)

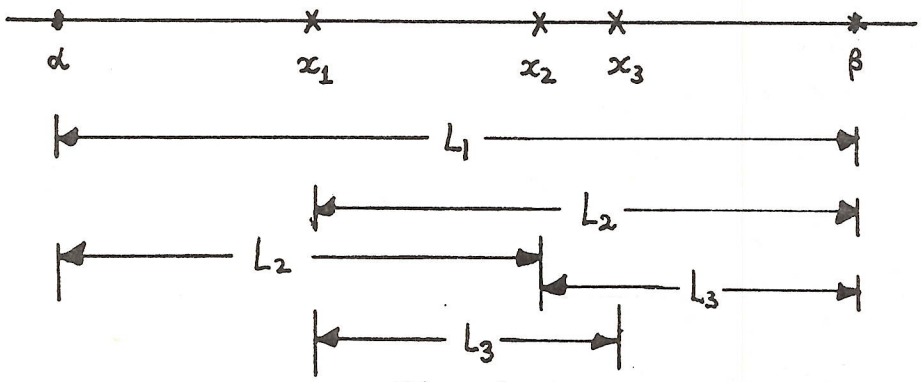

Fig. 8

Now visualize where x_4 might go within one of the L_3's (placed symmetrically about the centre from the point already present in L_3). Mark in the possible lengths L_4 and convince yourself that $L_2 = L_3 + L_4$. We continue on in this way. In general for the final three intervals of uncertainty

$$L_{n-2} = L_{n-1} + L_n \quad - - - - - - - - - \quad B$$

Equations A and B are sufficient to produce all the information we want.

Eliminate L_{n-1} from A and B to give

$$L_{n-2} = (2L_n - \varepsilon) + L_n = 3L_n - \varepsilon$$

Since $L_{n-3} = L_{n-2} + L_{n-1}$

then $L_{n-3} = (3L_n - \varepsilon) + (2L_n - \varepsilon)$

$$= 5L_n - 2\varepsilon$$

Similarly $L_{n-4} = L_{n-3} + L_{n-2}$

$$= (5L_n - 2\varepsilon) + (3L_n - \varepsilon)$$

$$= 8L_n - 3\varepsilon \quad - - - - - - - \quad C$$

The reader should show that $L_{n-5} = 13L_n - 5\varepsilon$.

By inspection we can see that the coefficients of L_n and ε (ignoring sign) are members of the sequence

1, 1, 2, 3, 5, 8, ...

These are the Fibonacci numbers defined by

$$F_0 = 1, \; F_1 = 1$$

$$F_m = F_{m-1} + F_{m-2}, \; m \geqslant 2$$

and we can generalize relationships like C by

$$L_{n-k} = F_{k+1}L_n - F_{k-1}\varepsilon \quad - - - - - - - \quad D$$

To get the relationship between L_1 and L_n we replace k by $n-1$ in D to give

$$L_1 = F_nL_n - F_{n-2}\varepsilon \quad - - - - - - - - \quad E$$

Similarly replacing k by $n-2$ in D gives

$$L_2 = F_{n-1}L_n - F_{n-3}\varepsilon \quad - - - - - - - \quad F$$

Eliminating L_n from E and F gives

$$L_2 = F_{n-1}\left(\frac{L_1 + F_{n-2}\varepsilon}{F_n}\right) - F_{n-3}\varepsilon$$

i.e. $$L_2 = \frac{F_{n-1}}{F_n} L_1 + \left(\frac{F_{n-1}F_{n-2}}{F_n} - F_{n-3}\right)\varepsilon$$

$$= \frac{F_{n-1}}{F_n} L_1 + \frac{(-1)^n}{F_n}\varepsilon \quad - - - - - - - \quad G$$

[See problem 5, Open Section, this issue.]

We have now set up the appropriate formulae for the Fibonacci search. If we assume ε is very small then

$L_2 \cong \frac{F_{n-1}}{F_n} L_1$ and similarly $L_3 \cong \frac{F_{n-2}}{F_{n-1}} L_2$ and so on.

Thus we have a simple scheme for selecting successive placements of x values. Let us illustrate this with our example. Suppose we wish to reduce IU using 6 evaluations with ε much smaller than 0.01. With $n = 6$ we use F_5 (=8) and F_6 (=13) to give by E and G,

$$L_6 = \frac{1}{13} \times 2 \quad \text{and} \quad L_2 = \frac{8}{13} \times 2$$

That is, the final interval of uncertainty is guaranteed to be of length 0.1538 and the first two evaluations should be at $x = 3 + \frac{16}{13} = 4.2308$ and $x = 5 - \frac{16}{13} = 3.7692$. Since $f(4.2308) = 0.55046$ and $f(3.7692) = 0.554198$ the new IU is between $x = 3.7692$ and $x = 5.0$ and of length $L_2 = 1.2308$.

To place the next evaluation we can either use $L_3 = \frac{5}{8} L_2$ in the same way as we used $L_2 = \frac{8}{13} L_1$ or better still we can simply place the next evaluation so that it is symmetrical about the centre of the new IU with respect to the placement $x = 4.2308$ which is already in this interval. This will be at $3.7692 + (5 - 4.2308) = 4.5384$. Since $f(4.5384) = 0.553739$ the new IU is between $x = 3.7692$ and $x = 4.5384$. Note that L_3 is 0.7692 which is $\frac{5}{8}$ of 1.2308.

The reader should show that the next placements are at $x = 4.0768$ then $x = 3.9232$ and finally $x = 4.0772$ with L_6 between $x = 4.0768$ and 4.2308.

In summary to use the Fibonacci search

(i) we either need to know the number of evaluations to be made or the ratio L_1/L_n so that the appropriate Fibonacci numbers can be selected. If L_1/L_n is known it is unlikely that it will be exactly equal to a Fibonacci number so that the nearest <u>larger</u> Fibonacci number must be selected.

(ii) L_2 must be found using the appropriate Fibonacci numbers and hence the placement of x_1 and x_2 determined.

(iii) $x_3, x_4, \ldots, x_n$ can then be successively calculated using symmetry about the centre of each new IU.

The main disadvantage of the Fibonacci search is the necessity of knowing directly or indirectly the number of evaluations to be made before the search can even start.

PROBLEMS

Solutions to Junior Problems will be accepted only from students in third or lower secondary years. Solutions of Problems in the Open Section will be accepted from students in any grade from Matriculation downwards. Some, but not all problems in the Open Section require more advanced knowledge than those in the Junior Section.

All solutions sent in must be the result of the solvers' unaided efforts.

Where a solution is obtained by the co-operation of two participants, the solution should be jointly signed by both authors. Our published solutions sometimes have to be abbreviated, but solutions sent in should be given fully.

Problems in this issue (Vol. 15, No. 2). We hope to publish these solutions and the names of those who sent in solutions in Vol. 15, No. 3. Solutions should be in the hands of the Editor by the end of September, 1977.

IMPORTANT. The solution of each problem must be written on a separate sheet, but the sheets may be sent in one envelope. Each sheet should be signed by the author(s), giving full name (in block letters), name of school and grade. You may send in solutions to one problem only or to any number of problems.

Solutions should be sent to The Editor, TRIGON, Department of Pure Mathematics, University of Adelaide, Adelaide, 5001.

Book prizes will be awarded to those students who have during the year sent in the most or the best correct solutions.

JUNIOR PROBLEMS

50. When is (i) $2 \times 2 = 100$?
(ii) $2 \times 2 = 11$?
(iii) 10 an odd number ?

51.

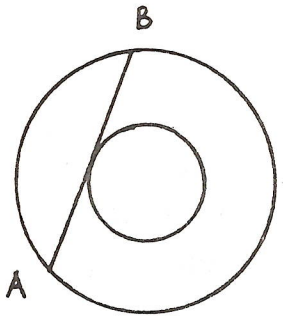

In the figure shown, show that the area of the annulus is

$$\tfrac{1}{4}\pi\,(AB)^2 .$$

[$\overline{AB}$ is a tangent to the inner circle meeting the outer circle at A and B .]

52. By inserting brackets in the expression:

$$1 \div 2 \div 3 \div 4 \div 5 \div 6 \div 7 \div 8 \div 9 ,$$

show how to make the value of the expression equal to $\frac{7}{10}$. Further, what are the smallest and largest possible numbers that can be obtained by inserting brackets in this expression?

53. How many 0's are there at the end of 100! (Definition: 100! means $1 \times 2 \times 3 \times 4 \times \ldots \times 100$).

54. What are the last two digits of $2^{2^{73}}$? Show your working.

55. In the figure shown, prove that

$$\theta_1 + \theta_2 + \theta_3 + \theta_4 + \theta_5 + \theta_6 = 360^\circ$$

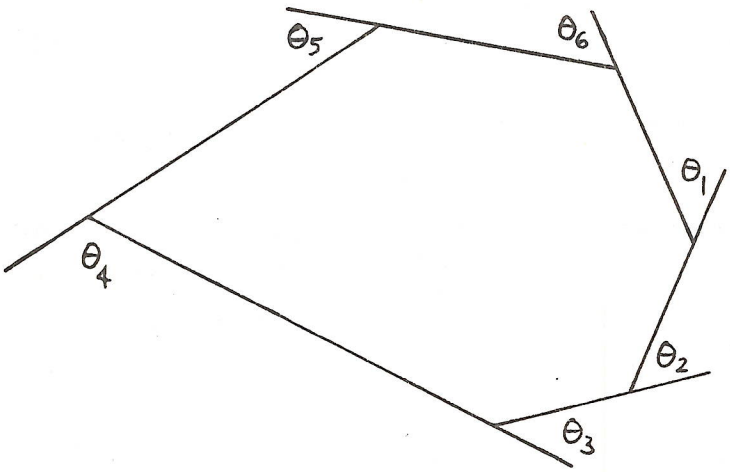

56. A lattice point in the plane is a point (x,y) whose coordinates x and y are both integers. Suppose we have a person located at <u>each</u> lattice point in the plane. Show that we cannot select 5 of these persons so that <u>each</u> can see the other 4 without someone (possibly not of the 5) being in the way.

SENIOR PROBLEMS

050. Let F_1, F_2 be the focal points of an ellipse, P a point on the circumference, and t the tangent-line through P. Prove that for all points Q on t, other than P, the sum of the distances QF_1 and QF_2 is greater than the sum $PF_1 + PF_2$. Hence show that PF_1 and PF_2 make equal angles with t. [See article: "On an optical property of the ellipse".]

051.

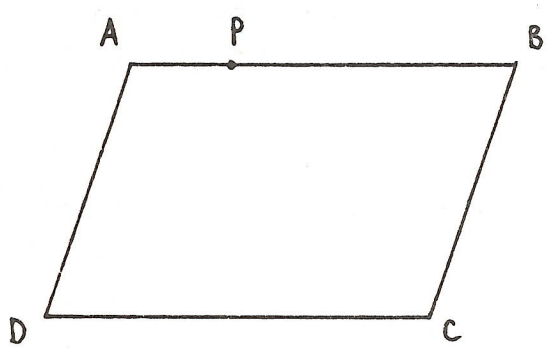

ABCD is a parallelogram; P is a point on the side AB. Construct a rectangle $PQRS$ with vertices Q, R, S on the sides BC, CD, DA respectively.

052. Show that if we choose 51 positive integers $\leqslant 100$, then one of them will divide another.

053. Let K be a convex polygon. If K can be cut up into squares and equilateral triangles, show that K cannot have more than 12 sides. [Hint: See Junior Problem 55.]

054. z_1, z_2, z_3 are 3 complex numbers and m_1, m_2, m_3 are three real positive numbers. Let P, Q, R be the points on the argand diagram, representing respectively z_1, z_2, z_3.

Prove that the point X which represents

$$z = \frac{m_1 z_1 + m_2 z_2}{m_1 + m_2}$$

is on the segment PQ and that the point Y that represents

$$w = \frac{m_1 z_1 + m_2 z_2 + m_3 z_3}{m_1 + m_2 + m_3}$$

is inside the triangle PQR .

054. The Fibonacci numbers are

$$1, 1, 2, 3, 5, 8, 13, 21, \ldots$$

i.e., $F_0 = 1$, $F_1 = 1$ and $F_n = F_{n-1} + F_{n-2}$ for $n \geqslant 2$.

Find their generating function and prove that

$$F_n = \frac{1}{\sqrt{5}} (\alpha^{n+1} - \beta^{n+1}) \qquad \ldots(*)$$

where $\alpha = \frac{1}{2}(1 + \sqrt{5})$, $\beta = \frac{1}{2}(1 - \sqrt{5})$

[Read article on generating functions.]

055. Using the same notation as in 054 show that

$$F_{n-1}F_{n-2} - F_n F_{n-3} = (-1)^n$$

for all $n \geqslant 3$. [You may use the result of 054(*) plus the fact that α, β are roots of the equation $x^2 - x - 1 = 0$ and so satisfy $\alpha + \beta = 1$, $\alpha\beta = -1$.]

This result was used in the article by Mr. R.F. Jones.

056. Show that for every integer n it is possible to find an integer q so that in decimal representation of nq only 0's and 1's appear.

[For example: $n = 2$, $q = 5$, $nq = 10$;

$n = 3$, $q = 37$, $nq = 111$]

SOLUTIONS TO PROBLEMS

IN TRIGON VOL. 15 NO. 1

JUNIOR SECTION

43. You would not add two fractions $\frac{a}{b}$ and $\frac{c}{d}$ to obtain $\frac{a+c}{b+d}$. Can you give at least two examples when the sum is correct? Is it possible that the sum is correct when each of a,b,c and d is positive? What can happen if we specify only that $\frac{a}{b}$ and $\frac{c}{d}$ are both positive?

SOLUTION

We first give a couple of examples where the sum is correct:

$$\frac{-2}{3} + \frac{8}{6} = \frac{-2+8}{3+6}$$

$$\frac{3}{2} + \frac{-75}{10} = \frac{3+(-75)}{2+10}$$

The sum is incorrect if a,b,c and d are all positive, for if it were true then

$$\frac{a}{b} + \frac{c}{d} = \frac{a+c}{b+d}$$

implies that

$$ad^2 + b^2c = 0$$

which is certainly false in this case. However,

$$\frac{16}{8} + \frac{-1}{-2} = \frac{16-1}{8-2} = \frac{15}{6}$$

is correct, which shows that it is not sufficient to assume that $\frac{a}{b}$ and $\frac{c}{d}$ are both positive.

44.

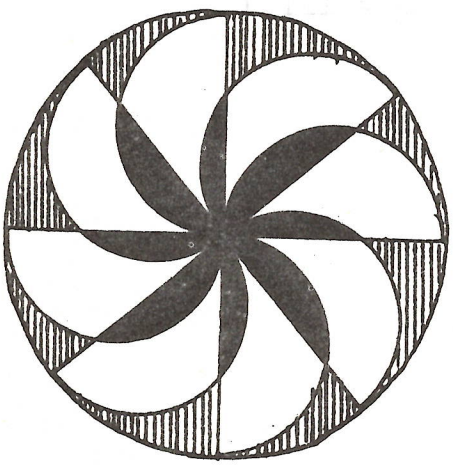

The circumference of a circle is divided up into n equal arcs and the points of division are joined to the centre. A semi-circle is drawn on each of the radii shown to obtain the pattern shown. Is it possible to choose n so that the dark shaded area (of the flower) is equal to the lightly shaded area of the edge?

SOLUTION

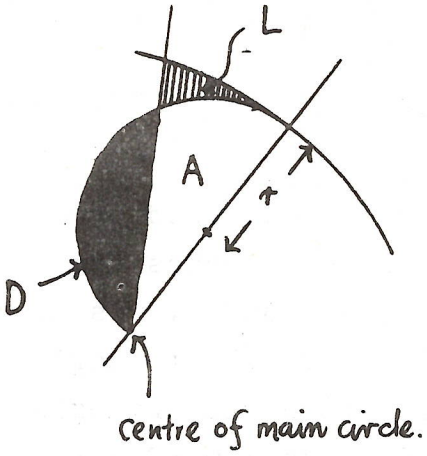

Figure 1 represents one of the segments from the main diagram above. D and L represent the area of the darkly and lightly shaded portions, respectively. Let r be the radius of the semi-circle, as shown. This means that the radius of the main circle is 2r . A represents the area of the unshaded portion in figure 1.

Clearly

$$D + A = \frac{1}{2}\pi r^2 \qquad \ldots(1)$$

and

$$L + A = \frac{1}{n}\text{(area of the main circle)}$$

$$= \frac{1}{n}\pi(2r)^2 \qquad \ldots(2)$$

Subtracting (1) from (2) we eliminate A and obtain

$$L - D = \frac{1}{n}\pi(2r)^2 - \frac{1}{2}\pi r^2$$

The question now reduces to whether we can find n such that L = D , that is, so that

$$\frac{1}{n}\pi(2r)^2 = \frac{1}{2}\pi r^2$$

This can be arranged by chosing n = 8 .

45. No family has more than 4 children in the Euclid Park Boys High School. One day when all the boys are at school, they answer a questionnaire. One of the questions is: How many brothers have you got at the school? In the subsequent statistics put out by the school, this statement appears:

216 boys have no brother or two brothers at the school

195 boys have one or three brothers at the school.

Can this statement be correct?

SOLUTION

The answer is no.

Suppose x families have 2 boys and y families have 4 boys

then 2x boys answer the questionnaire with answer 1 and 4y boys answer the questionnaire with answer 3. Hence we must have

$$2x + 4y = 195$$

which cannot hold since 195 is an odd number.

46.

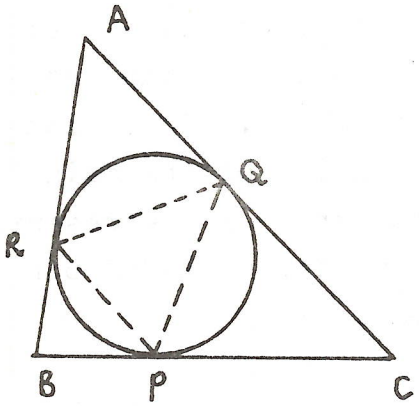

The circle inscribed in a triangle ABC touches the sides at P,Q and R. Is it possible that the triangle PQR is similar to triangle ABC. (In other words can triangles ABC and PQR have the same angles.)

SOLUTION

In ΔABC, let $m\angle A = \alpha$, $m\angle B = \beta$, $m\angle C = \gamma$

Let us calculate $m\angle R$ in ΔPQR. Now $m\angle ARQ = 90° - \frac{1}{2}\alpha$ since ΔARQ is isosceles, and $m\angle BRP = 90° - \frac{1}{2}\beta$ since ΔRBP is also isosceles.

Hence $m\angle R = m\angle QRP = 180° - (90° - \frac{1}{2}\alpha) - (90° - \frac{1}{2}\beta) = \frac{1}{2}(\alpha + \beta)$

Similarly, $m\angle Q = \frac{1}{2}(\alpha + \gamma)$, $m\angle P = \frac{1}{2}(\beta + \gamma)$

Suppose that $\alpha \geqslant \beta \geqslant \gamma$, then

$$\tfrac{1}{2}(\beta + \gamma) \leqslant \tfrac{1}{2}(\alpha + \gamma) \leqslant \tfrac{1}{2}(\alpha + \beta)$$

For similarity we must then have

$$\tfrac{1}{2}(\beta + \gamma) = \gamma, \quad \tfrac{1}{2}(\alpha + \gamma) = \beta, \quad \tfrac{1}{2}(\alpha + \beta) = \alpha$$

which implies that $\alpha = \beta = \gamma$. In other words ΔABC must be equilateral.

47. Find all integers (positive or negative) x and y such that

$$\frac{1}{x} + \frac{1}{y} = \frac{1}{2}$$

SOLUTION

$$\frac{1}{x} + \frac{1}{y} = \frac{1}{2} \qquad \ldots(*)$$

implies $$\frac{x + y}{xy} = \frac{1}{2}$$

therefore $$2x + 2y = xy$$

or $$2x - xy + 2y = 0$$

or $$x(2 - y) + 2y - 4 = -4 \qquad \text{(a trick)}$$

or $$x(2 - y) - 2(2 - y) = -4$$

or $$(x - 2)(2 - y) = -4 = -2 \times 2$$

As x,y are integers, this implies

$x - 2 = \pm 4$ and $2 - y = \mp 1$ ...(1)

$x - 2 = \pm 1$ and $2 - y = \mp 4$ ...(2)

$x - 2 = \pm 2$ and $2 - y = \mp 2$ ...(3)

(1) gives $x = 6$, $y = 3$ and $x = -2$, $y = 1$

(2) gives $x = 3$, $y = 6$ and $x = 1$, $y = -2$

(3) gives $x = 0$, $y = 0$ and $x = 4$, $y = 4$.

Of course $x = 0$, $y = 0$ do not satisfy (*) so all the solutions in tabular form are:

x	-2	1	3	4	6
y	1	-2	6	4	3

48.

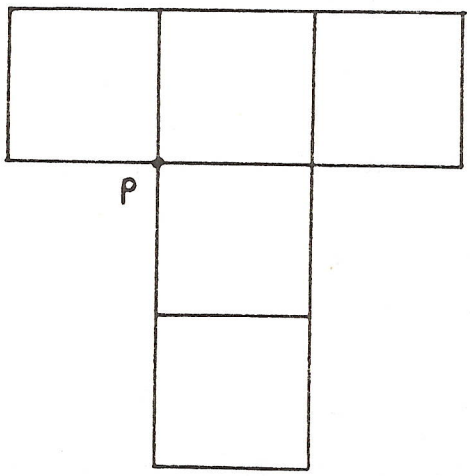

The figure shown has an area of 5 square units. How many straight lines can be drawn through P such that they divide the figure into two sections of equal area? Prove your result.

SOLUTION

Answer: one straight line.

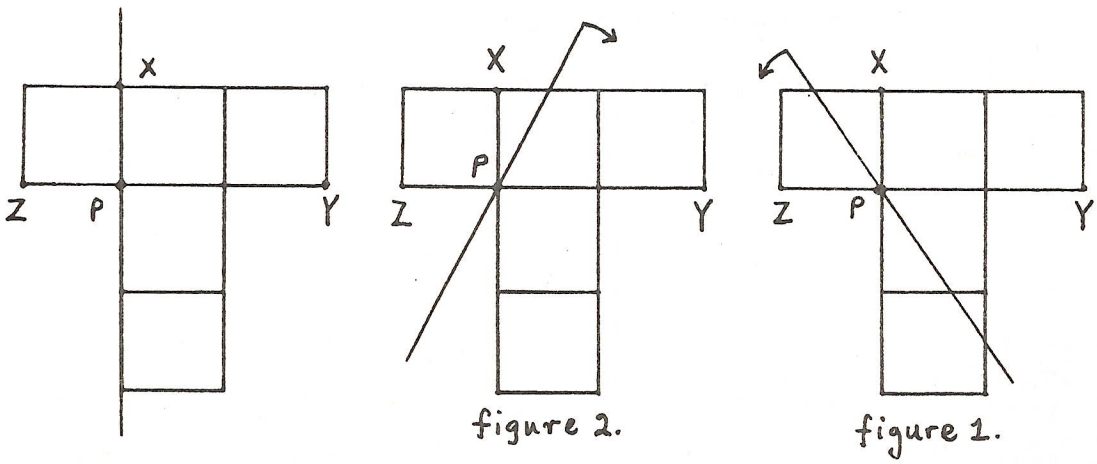

figure 2. figure 1.

A straight line through PX (extending in both directions) can be rotated through (1) 90° clockwise to PY (as in figure 2) or (2) 90° anticlockwise to PZ (as in figure 1).

Case (1): In the position PX, there is one square to the left of the line and four to the right. In the position PY there are three squares to the left and two to the right, i.e., one to the left changes to three to the left and four to the right changes to two to the right. Since the area on the left side of the line increases continuously from one to three there must be a point with area 2½ squares on each side of the line.

Case (2): On rotating the line through PX anticlockwise to PZ about P, one square to the left and four to the right changes to two to the left and three to the right. The area to the left is thus never more than two squares.

49. Show that by adding one to the product of four consecutive integers, a perfect square is obtained. [e.g. $2 \times 3 \times 4 \times 5 + 1 = 121 = 11^2$]

SOLUTION

Let the four consecutive integers be $n - 1$, n, $n + 1$, $n + 2$, then

$$\begin{aligned} & (n - 1)n(n + 1)(n + 2) + 1 \\ = \quad & n(n^2 - 1)(n + 2) + 1 \\ = \quad & (n^3 - n)(n + 2) + 1 \\ = \quad & n^4 + 2n^3 - n^2 - 2n + 1 \end{aligned}$$

Let us try writing this last expression as $(n^2 + an - 1)^2$ where a is to be determined. Now

$$(n^2 + an - 1)^2 = n^4 + 2an^3 + (a^2 - 2)n^2 - 2an + 1$$

so for $a = 1$ we have the result that

$$1 + (n - 1)n(n + 1)(n + 2) = (n^2 + n - 1)^2 .$$

SENIOR PROBLEMS

043. Refer to Problem 44 (Junior Section). What happens to the shaded border as $n \to \infty$ (n tends to infinity)? Prove your statement.

SOLUTION

Let us analyse the situation when the circumference has been divided up into n equal arcs. We shall use similar notation to that used in the Solution to question 44 (Junior Section) - see this issue. In this situation, let $L_n = L$, $A_n = A$, $D_n = D$ and $\theta_n = \frac{2\pi}{n}$.

Our question here asks us to calculate

$$\lim_{n\to\infty} (n\, L_n) \quad .$$

By equation (2) of question 44,

$$L_n = \frac{4\pi r^2}{n} - A_n$$

thus

$$nL_n = 4\pi r^2 - nA_n$$

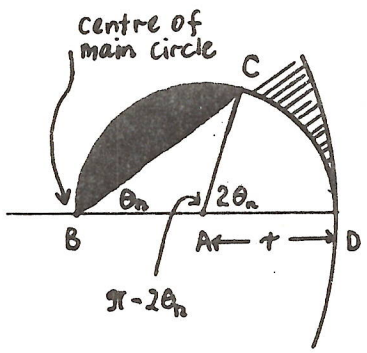

$$\begin{aligned} A_n &= \text{area } \Delta\ ABC + \text{area sector } ACD \\ &= \tfrac{1}{2}r^2 \sin(\pi - 2\theta_n) + \tfrac{1}{2}r^2(2\theta_n) \\ &= \tfrac{1}{2}r^2 \sin 2\theta_n + r^2\theta_n \\ \therefore \quad nA_n &= n\theta_n r^2\left(\frac{\sin 2\theta_n}{2\theta_n} + 1\right) \\ &= 2\pi r^2 \left(1 + \frac{\sin 2\theta_n}{2\theta_n}\right) \\ &\to 2\pi r^2 (1 + 1) = 4\pi r^2 \end{aligned}$$

as $n \to \infty$. We have used here the fact that

$$\lim_{x\to 0} \frac{\sin x}{x} = 1 \ .$$

$$\therefore \quad \lim_{n\to\infty} (nL_n) = 4\pi r^2 - 4\pi r^2 = 0.$$

044. Find the number which has 8 divisors such that the product of the divisors is 331776.

SOLUTION

Method 1

We find first the prime factors of the required number x, by factorising 331776.

$$331776 = 3^4 \times 2^{12} .$$

Hence $$x = 2^{\alpha}.3^{\beta} \qquad \alpha > 0,\ \beta > 0 .$$

Each factor of x is of the form

$$2^i\ 3^j$$

where $$0 \leqslant i \leqslant \alpha, \quad 0 \leqslant j \leqslant \beta$$

so i and j can take $\alpha+1$ and $\beta+1$ values respectively. Thus the number of divisors of x is

$$N = (\alpha+1)(\beta+1) = 8, \quad \text{where} \quad \alpha > \beta.$$

The only possible solution is given by

$$\alpha+1 = 4, \quad \beta+1 = 2.$$

Hence $$x = 2^3.3^1 = \underline{24}.$$

Method 2

Write down the divisors in ascending order:

$1 = d_1, d_2, d_3, d_4, d_5, d_6, d_7, d_8 = x.$

We have

$$d_1 \times d_8 = d_2 \times d_7 = d_3 \times d_6 = d_4 \times d_5 = x .$$

Hence the product of the divisors

$$331776 = x^4 .$$

$$x = \sqrt[4]{331776} = 24 .$$

NOTE It is easy to show in general that if an integer x has n divisors and the product of the divisors is P, then

$$P^2 = x^n .$$

045. Show that $2^n - 1$ cannot be a perfect power. (That is, of the form a^k where a,k are positive integers and $k \geqslant 2$.)
(Note: we may disregard the trivial cases $a = 1$ and $n = 0$.)

SOLUTION

We are going to prove the statement by assuming that

$$2^n - 1 = a^k \quad (1) \qquad (a > 1, k > 1)$$

and arriving to a contradiction.
First we note that since the left hand side is odd, a must also be an odd number. Write (1) in the form

$$2^n = a^k + 1 .$$

We are going to establish that the right hand side has an odd factor greater than 1 and so it cannot be equal to the left hand side. There are two cases to be considered.

(i) k is even.

Then $a^k + 1 = a^k - 1 + 1$

$$= (a^{\frac{k}{2}} - 1)(a^{\frac{k}{2}} + 1) + 1 .$$

Since a is odd, $a^{\frac{k}{2}}$ is also odd, so $a^{\frac{k}{2}} - 1$ and $a^{\frac{k}{2}} + 1$ are even, thus $(a^{\frac{k}{2}}-1)(a^{\frac{k}{2}}+1)$ is a multiple of 4 (in fact a multiple of 8), hence

$$(a^{\frac{k}{2}} - 1)(a^{\frac{k}{2}} + 1) + 1$$

is an odd multiple of 2, hence cannot be a power of 2 .

(ii) k is odd.

$$a^k + 1 = (a + 1)(a^{k-1} - a^{k-2} + a^{k-3} - \ldots + 1) .$$

Note that there are k terms in the second factor on the right hand side, where k is odd. Each term is a power of a, hence must be odd, so the sum of an odd number of odd terms must be odd. Furthermore, the sum is greater than 1, since $a^{k-1} - a^{k-2} > 0$, $a^{k-3} - a^{k-4} > 0$, and so on. So again $a^k + 1$ has an odd factor different from 1.

046. OA,OP are two radii of a circle perpendicular to each other at $t = 0$. (t = time.) A tangent-line AX is fixed to the circle which rotates uniformly (with constant speed) in an anticlockwise direction about O.

At the same time the line OP rotates in a clockwise direction at the same rate as the circle. Suppose

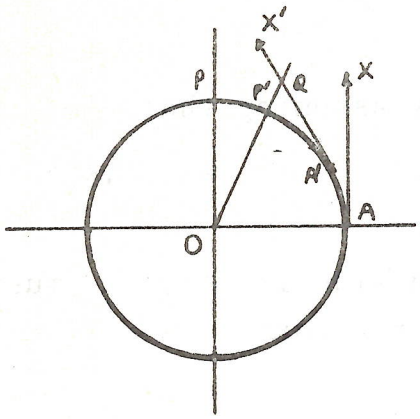

Q is the point where OP' and A'X' intersect, where OP', A'X' are the positions taken up by OP, AX at a certain time instant. Express the coordinates of Q in terms of the angle of rotation and hence find the equation of the locus. Sketch the locus.

SOLUTION

Let θ be the angle by which OA turned anticlockwise, OA' is the normal to the tangent-line A'Q, hence the (normal) equation of the tangent-line A'Q is

(1) $$x \cos + y \sin - r = 0$$

where r is the radius of the circle. The line OP' is inclined at θ to the y-axis, hence at angle $\frac{\pi}{2} - \theta$ to the x-axis. The equation of OP' is therefore

(2) $$y = x \tan(\tfrac{\pi}{2} - \theta) .$$

Since $\tan(\frac{\pi}{2} - \theta) = \cot \theta = \frac{\cos \theta}{\sin \theta}$,we may write equation (2) as

(2a) $$x \cos \theta - y \sin \theta = 0.$$

Solving equation (1) and (2a) we obtain the coordinates of the intersection Q as

$$x = \frac{r}{2\cos\theta} , \qquad y = \frac{r}{2\sin\theta} .$$

To obtain the Cartesian equation of the locus, write

$$\cos \theta = \frac{r}{2x} \text{ and } \sin \theta = \frac{r}{2y} .$$

Since $\cos^2\theta + \sin^2\theta = 1$, we find that the coordinates of Q satisfy the equation

$$\boxed{\frac{1}{x^2} + \frac{1}{y^2} = \frac{4}{r}}$$

To sketch the locus represented by this equation, we observe

(1) The equation contains only x^2 and y^2 terms, hence the locus is symmetrical about both coordinate axes.

(2) x and y occur symmetrically in the equation, hence the locus is symmetrical about the bisection of the quadrants.

It suffices therefore to investigate the nature of the curve in the first quadrant for $x \geqslant y$ (i.e. the section below the angular bisector).

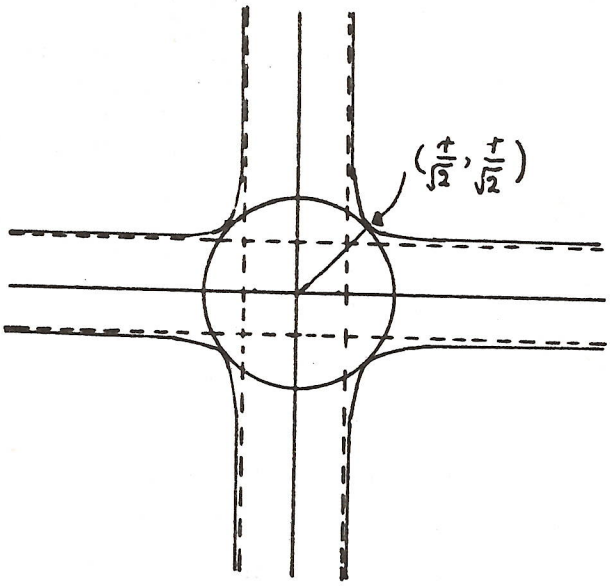

When $x = y$, we obtain $2x^2 = r^2$, hence $x = y = \frac{r}{\sqrt{2}}$, (i.e. the point is on the circle). As x increases, y decreases and as $x \to \infty$, $y \to \frac{r}{2}$.

Using the symmetrices the sketch can be completed. The asymptotes are the lines $y = \pm\frac{r}{2}$ and $x = \pm\frac{r}{2}$. The locus is known as the cross-curve.

047. Prove that

$$\binom{2}{2}\binom{4}{2}\cdots\binom{2n-2}{2}\binom{2n}{2} = n!1.3.5\ldots(2n-1) = \frac{1}{2^n}(2n)!$$

Interpret the equalities by a combinatorial meaning. (Hint: consider pairing off $2n$ players in a tennis tournament.)

SOLUTION

(a) Proof. Write $\binom{k}{2}$ in the form $\frac{k(k-1)}{2}$.

Then

$$\binom{2}{2}\binom{4}{2}\cdots\binom{2n-2}{2}\binom{2n}{2} = \frac{1.2}{2}\cdot\frac{3.4}{2}\cdots\frac{(2n-3)(2n-2)}{2}\cdot\frac{(2n-1)2n}{2}$$

$$= \frac{(2n)!}{2^n}.$$

Now write down $(2n)!$ as the product of its even and odd factors:

$$(2n)! = 2.4.6\ldots2n.1.3.5\ldots(2n-1) = (2.1).(2.2).(2.3)\ldots(2.n).1.3.5\ldots(2n-1) = 2^n\, n!\; 1.3.5\ldots(2n-1).$$

Hence $\frac{(2n)!}{2^n} = n!\; 1.3.5\ldots(2n-1)$.

(b) <u>Combinatorial interpretation</u>

Suppose that we have n tennis courts to be allocated to $2n$ people taking part in a tournament. Each form of the expression represents a way of organising the tournament.

(i) Select a pair for the first court. This can be done in $\binom{2n}{2}$ ways. Since there are $2n-2$ people left, the second court can be allocated in $\binom{2n-2}{2}$ ways. Continuing in this manner, the total number of allocations is

$$A = \binom{2n}{2}\binom{2n-2}{2} \cdots \binom{4}{2}\binom{2}{2} \quad .$$

(ii) Pair off first the players. Pick out any one of them, his opponent can be chosen in $(2n-1)$ ways. Now pick any one of the remaining players and choose an opponent. This can be done in $(2n-3)$ ways. Thus we find that the number of pairings is $P = (2n-1)(2n-3) \ldots 3.1$.
The number of ways the courts can be allocated to a fixed set of n pairs of competitors is $n!$ Hence the total number of allocation is

$$A = n!\ 1.3.5 \ldots (2n-1).$$

(iii) The courts can be allocated by simply lining up the players and letting the first two go to the first court, the second two to the second court and so on. We can line up the players in $(2n)!$ ways. However, in this way we obtain 2^n times the number of allocations A, since, once the players are chosen for a certain court, the allocation does not distinguish between the order of the opponents. Hence

$$(2n)! = 2^n A$$
$$A = \frac{1}{2^n}(2n)!$$

048.

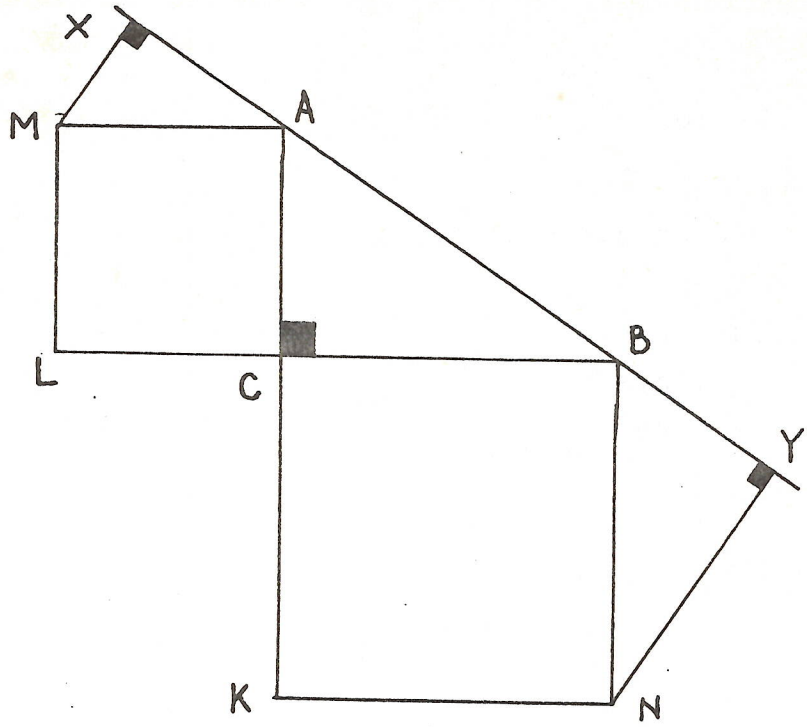

The triangle ABC has a right angle at C . AMLC and CBNK are squares drawn on the sides AC and CB. MX and NY are perpendicular to the hypotenuse produced.

Prove that the sum of the lengths MX and NY is equal to the length of the hypotenuse AB .

SOLUTION

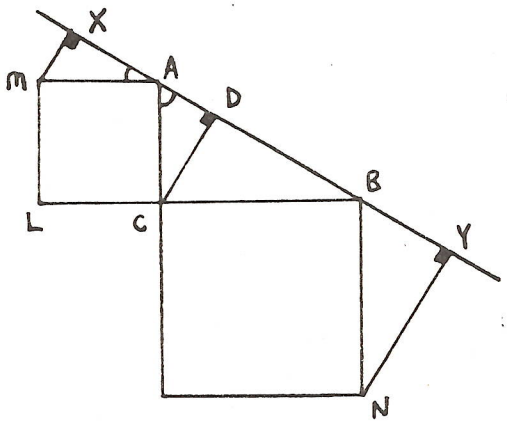

Let D be the foot of the perpendicular from C to the hypotenuse AB .

In the right angled triangle AXM and CDA, the angles XAM and CAD are complementary, since $\angle$MAC is a right angle. Thus the triangles AXM and CDA are equiangular and since their hypotenuses are AC and AM respectively and AMLC is a square, they are congruent (ASA).

Similarly we can show $\overline{BD} = \overline{NY}$.

Thus in particular $\overline{AD} = \overline{MX}$.

Thus $\overline{MX} + \overline{NY} = \overline{AD} + \overline{BD} = \overline{AB}$.

049. Let $k_1, k_2, \ldots, k_n$ be n integers and let $m_1, m_2, \ldots, m_n$ be a rearrangement of these integers. Show that the expression

$$|k_1 - m_1| + |k_2 - m_2| + \ldots + |k_n - m_n|$$

is an even number.

SOLUTION

We note first that if a is any integer then the difference $|a| - a$ is always even, for

if $a \geqslant 0$ then $|a| = a$, so the difference is 0

and

if $a < 0$ then $|a| = -a$, so the difference is

$$-a - a = -2a = 2|a| \quad .$$

Consider now the expression

$$(k_1 - m_1) + (k_2 - m_2) + \ldots + (k_n - m_n)$$
$$= k_1 + k_2 + \ldots k_n - (m_1 + m_2 + \ldots + m_n) = 0,$$

since the m's are a rearrangement of the k's .

The difference between the given expression and 0 is then

$$|k_1 - m_1| + |k_2 - m_2| + \ldots + |k_n - m_n| - [(k_1 - m_1) + (k_2 - m_2) + \ldots + (k_n - m_n)]$$

$$= \{|k_1 - m_1| - (k_1 - m_1)\} + \{|k_2 - m_2| - (k_2 - m_2)\} + \ldots + \{|k_n - m_n| - (k_n - m_n)\}.$$

Inside each curly bracket we have an expression of type $|a| - a$, hence the given expression is the sum of even numbers and so must be even.

NOTES ON SOLUTIONS RECEIVED

TRIGON VOL. 15, NO. 1

SENIOR PROBLEMS

043. Good solution by Mark Lawrence (Westminster School, Year 12). The solutions of P. Leske (Concordia College, Year 12) and B. Mitchell (Enfield H.S., Year 12) are partial.

When taking the limit of a product of type

$$P = n.\varepsilon$$

where $n \to \infty$ and $\varepsilon \to 0$,

great care must be exercised to establish the existence of the limit and its value if it exists. To illustrate the possibilities, consider three examples:

(1) $\varepsilon = \frac{1}{n^2}$ $P \to 0$

(2) $\varepsilon = \frac{1}{n}$, $P \to 1$

(3) $\varepsilon = \frac{1}{\sqrt{n}}$, the limit does not exist.

044. Good solutions by M. Lawrence, B. Mitchell, S. Warren (Loxton H.S., Year 12), K. Weedon (Our Lady of Sacred Heart College, Year 12) and K. White. Most solutions used Method 2 (as described), but some algorithmic methods were also established. Mark Lawrence and K. White each gave two solutions.

045. No complete solution was received. M. Lawrence established the theorem for even values of k, K. White for some special values of k.

046. Best solution by K. White (Westminster School, Year 12). B. Mitchell obtained the cartesian equation and sketched correctly half of the locus. Katie Weedon obtained the cartesian equation, but did not sketch the curve. M. Lawrence and P. Leske obtained parametric equation, but did not derive the cartesian equation.

M. Lawrence, P. Leske, B. Mitchell, K. Weedon and K. White proved the relations. A combinatorial interpretation for one of the forms was given by K. White.

.8. Good solutions by M. Lawrence, P. Leske, B. Mitchell, K. Weedon, K. White.

049. Good solutions by M. Lawrence, B. Mitchell and K. White. Bruce Mitchell established that the parity of the given expression is the same as the parity of $(k_1 - m_1)^2 + (k_2 - m_2)^2 + \ldots$ and then proved that the sum of the squares is even.

The Wicked Tenant

Answer: Suppose the tenants deliver their nuggets to the landlord in sacks. Take one nugget from the first tenant's sack, two nuggets from the second tenant's sack, three nuggets from the third tenant's sack, and so on. Place all these nuggets on the weighing machine. If all the nuggets were good the total weight would be

$$(1 + 2 + 3 + \ldots + 100) \times 10 = 50{,}500 \text{ grams.}$$

However if the weighing machine indicated that the total was $\frac{1}{10}$ gram underweight, you would know that the first tenant was the cheat; if the weighing was $\frac{2}{10}$ grams underweight, you would know the second tenant was a cheat, and so on.